RF28R7551SR

SAMSUNG

28 cu. ft. 4-Door French Door Refrigerator with 21.5" Connected Touchscreen Family Hub™

Signature Features

Food
- See inside your refrigerator from anywhere, with 3 built-in cameras.
- Create and share shopping lists, plan meals based on the food inside your refrigerator and automically set expiration dates.

Family
- Create your own home screen with Family Board, by adding personalized pictures, stickers and handwritten notes.
- Customize your screen saver with picture slide show, weather and animations.

Fun
- Stream your favorite music service directly on your Family Hub™ screen.
- Mirror your Samsung TV or Samsung phone, right on your Family Hub™.

Your Home
- Access your smart devices and Samsung appliances from your Family Hub™ screen; set lights, hear and speak to someone at your front door, monitor your baby's room and receive laundry end-of-cycle notifications.
- Receive Wi-Fi updates so your fridge stays up to date with the latest features and apps.

Bixby Voice 2.0
- Intelligent voice assistant allows hands-free navigation.
- Recognizes user's voice and provides a personalized experience.

Available Colors

- Fingerprint Resistant Stainless Steel (shown)
- Fingerprint Resistant Black Stainless Steel
- Fingerprint Resistant Tuscan Stainless Steel

Family Hub™

FlexZone™ Drawer

Convenience
- FlexZone™ Drawer with 4 Temperature Settings and Smart Divider
- Wi-Fi and Bixby Enabled
- Adjustable Shelves for Tall Oversized Items
- Auto Pull-Out Upper Freezer Drawer
- Water Filter Indicator

Design
- Fingerprint Resistant Finish
- Modern External Filtered Water and Ice Dispenser
- High Efficiency LED Lighting
- EZ-Open Handle™ on Freezer Door and FlexZone™ Drawer
- Tempered Glass Spill-Proof Shelves
- Gallon Door Bins
- Dispenser Light

Performance
- Twin Cooling Plus®
- Metal Cooling
- Ice Max - Stores up to 4.2 lbs of ice
- ENERGY STAR® Compliant
- Power Freeze and Power Cool Options
- Two Humidity-Controlled Crispers
- CoolTight Door
- Door Alarm

Rating

ENERGY STAR® rated:
755 kWh/yr

RF28R7551SR

SAMSUNG

28 cu. ft. 4-Door French Door Refrigerator with 21.5" Connected Touchscreen Family Hub™

Installation Specifications

1. Measure the height, width and depth of the opening, making sure to include baseboards, molding tile, countertop overhang, etc. Check to be sure there is enough room to open the door (consider walls, islands or other obstacles when measuring).
2. Refer to illustration below to determine dimensions.
3. Allow 2.5" of clearance on hinge side of refrigerator when installing next to a wall where handle may make contact.
4. Allow 1" minimum clearance at rear for proper air circulation and water/electrical connections. Allow a 3/8" minimum clearance at sides and top for ease of installation.
5. Ensure each door and entryway in the home is wide enough for the refrigerator to be moved through easily.

For optimal usage and to be able to open refrigerator doors completely, do not install next to a wall.

Please note: The following dimension and cutout information is for planning purposes only. For complete installation details, consult manual packed with product, or download manual online at samsung.com.

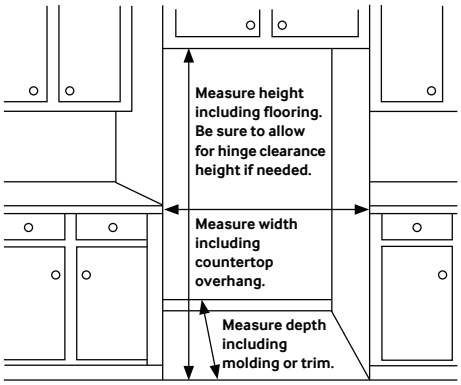

Dimensions

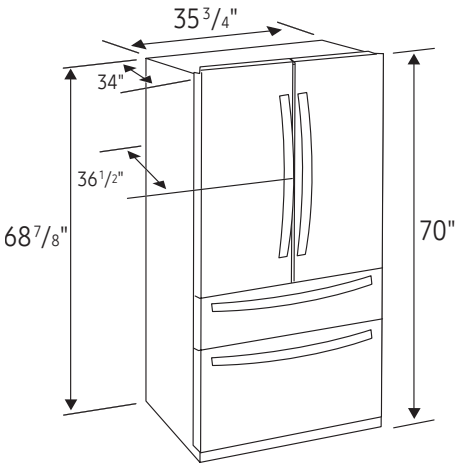

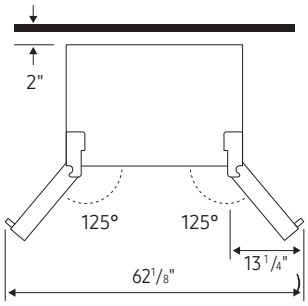

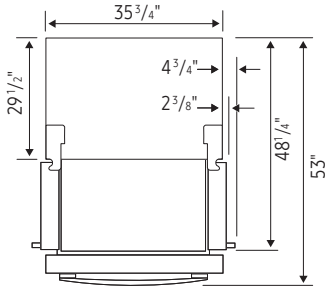

Total Capacity: 27.7 cu. ft.

Refrigerator: 15.6 cu. ft.
- 2 Humidity-Controlled Crispers
- 5 Tempered Glass Spill-Proof Shelves
  - 1 Slide-In
  - 1 Slide-Out
  - 1 Foldable Half
  - 2 Fixed
- 6 Door Bins
  - Right Door: 3 Door Bins
  - Left Door: 3 Regular Bins
- Metal Cooling
- High Efficiency LED Lighting

FlexZone™ Drawer: 3.8 cu. ft.
- EZ-Open Handle™
- 4 Temperature Zones with Smart Divider
  - Meat/Fish (29°F)
  - Cold Drinks (33°F)
  - Deli/Snacks (37°F)
  - Wine/Party Dishes (42°F)

Freezer: 8.3 cu. ft.
- EZ-Open Handle™
- Take Out Box
- 1 Drawer Divider
- High Efficiency LED Lighting

Warranty

One (1) Year Parts and Labor on Refrigerator

Five (5) Years Parts and Labor on Sealed Refrigeration System Only*

Ten (10) Years Parts and Five (5) Years Labor on Digital Inverter Compressor

*Compressor, evaporator, condenser, drier and connecting tubing.

Product Dimensions & Weight

Dimensions (WxHxD with hinges, handles and doors): 35 3/4" x 70" x 36 1/2"

Dimensions (WxHxD without hinges and door): 35 3/4" x 68 7/8" x 29 1/2"

Dimensions (WxHxD with hinge and door, no handle): 35 3/4" x 70" x 34"

Weight: 346 lbs

Shipping Dimensions & Weight (WxHxD)

Dimensions: 38 1/4" x 75 3/4" x 36 1/4"

Weight: 368 lbs

Color	Model #	UPC Code
Fingerprint Resistant Stainless Steel	RF28R7551SR	887276345321
Fingerprint Resistant Black Stainless Steel	RF28R7551SG	887276345314
Fingerprint Resistant Tuscan Stainless Steel	RF28R7551DT	887276345307

Actual color may vary. Design, specifications, and color availability are subject to change without notice. Non-metric weights and measurements are approximate.

©2019 Samsung Electronics America, Inc., 85 Challenger Road, Ridgefield Park, NJ 07660. Tel: 800-SAMSUNG. samsung.com. Samsung is a registered trademark of Samsung Electronics Co., Ltd.